SB-700_DSB01_SPIRIT

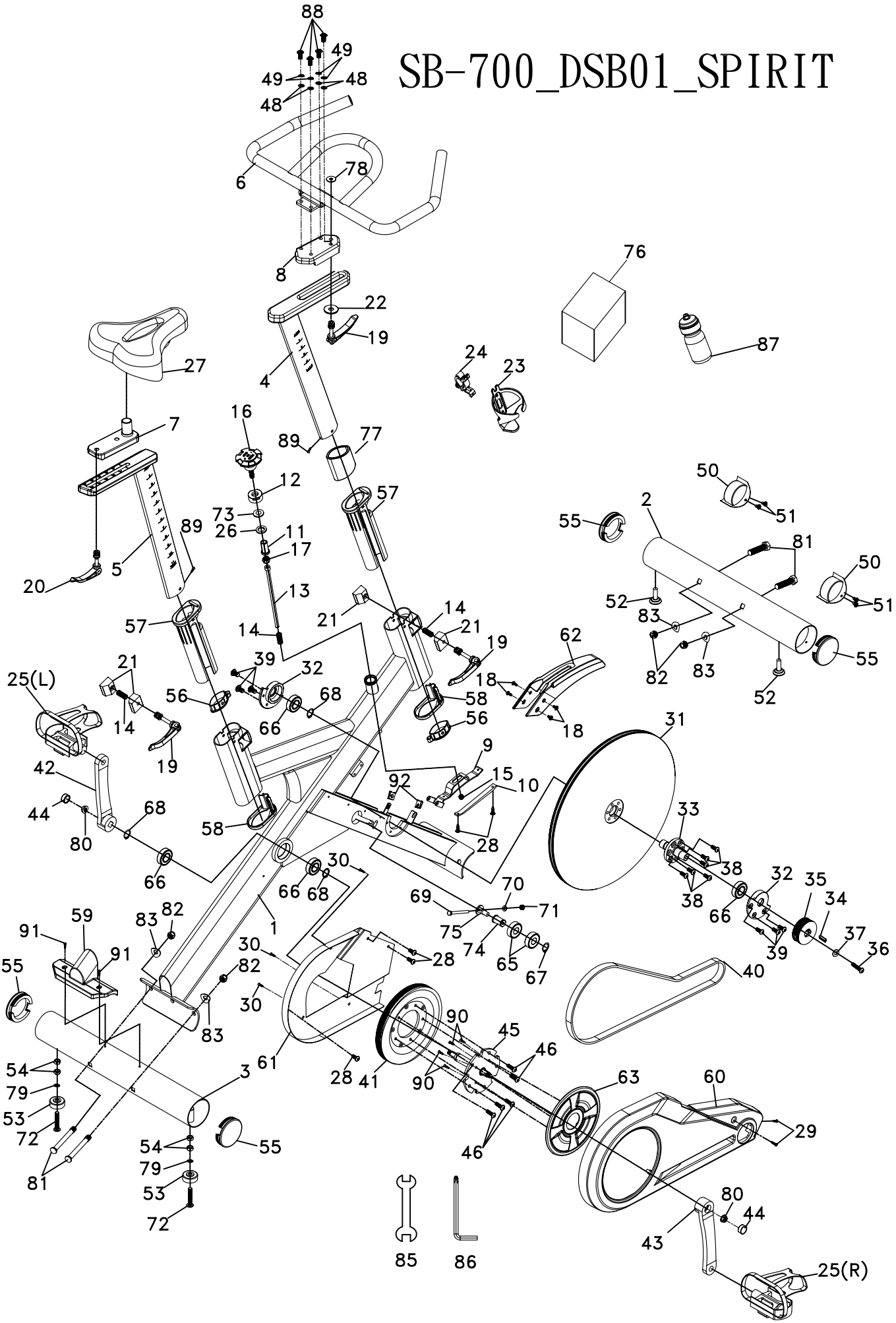

980818AM1020